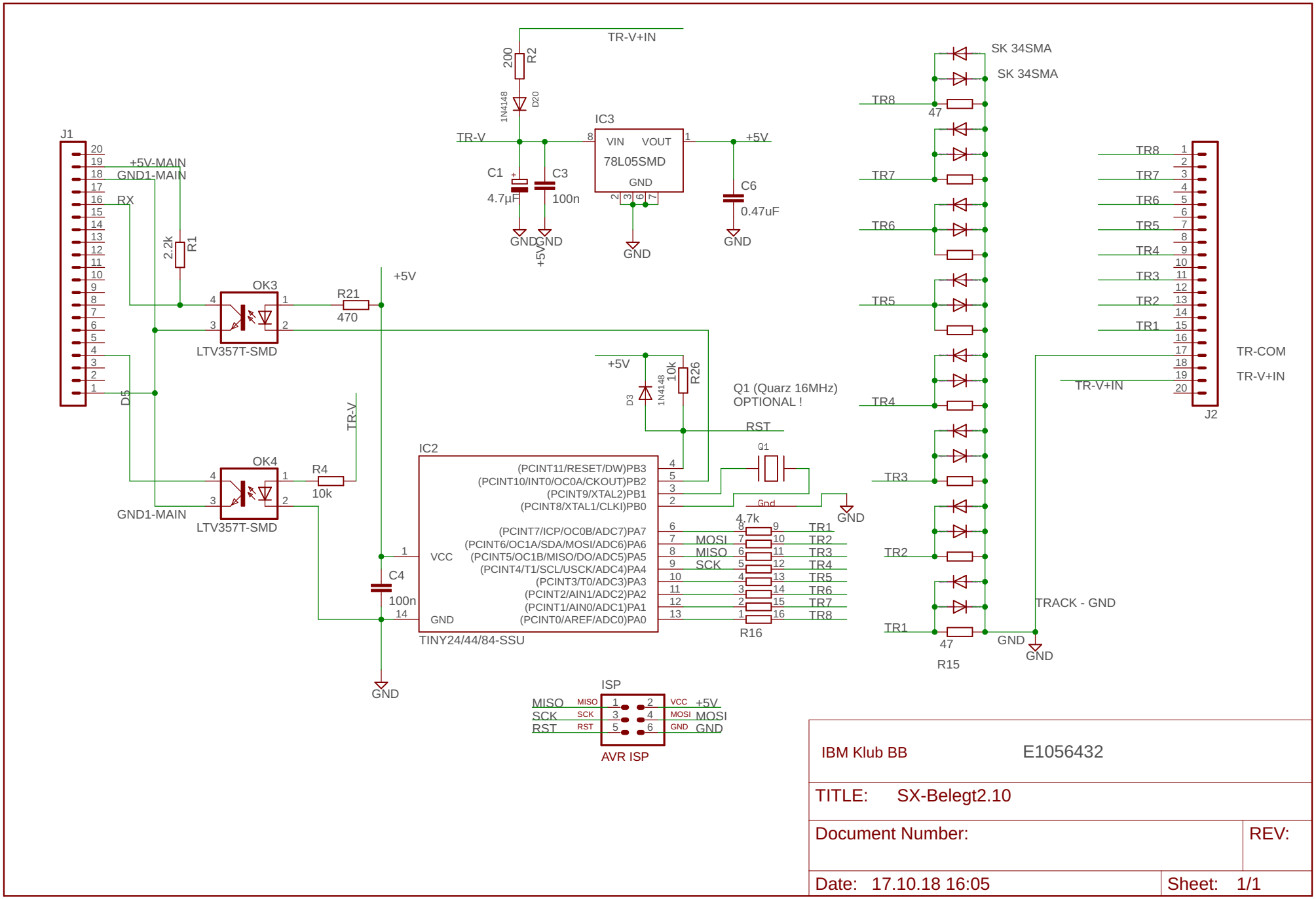

IBM Klub BB	E1056432
TITLE: SX-Belegt2.10	
Document Number:	REV:
Date: 17.10.18 16:05	Sheet: 1/1