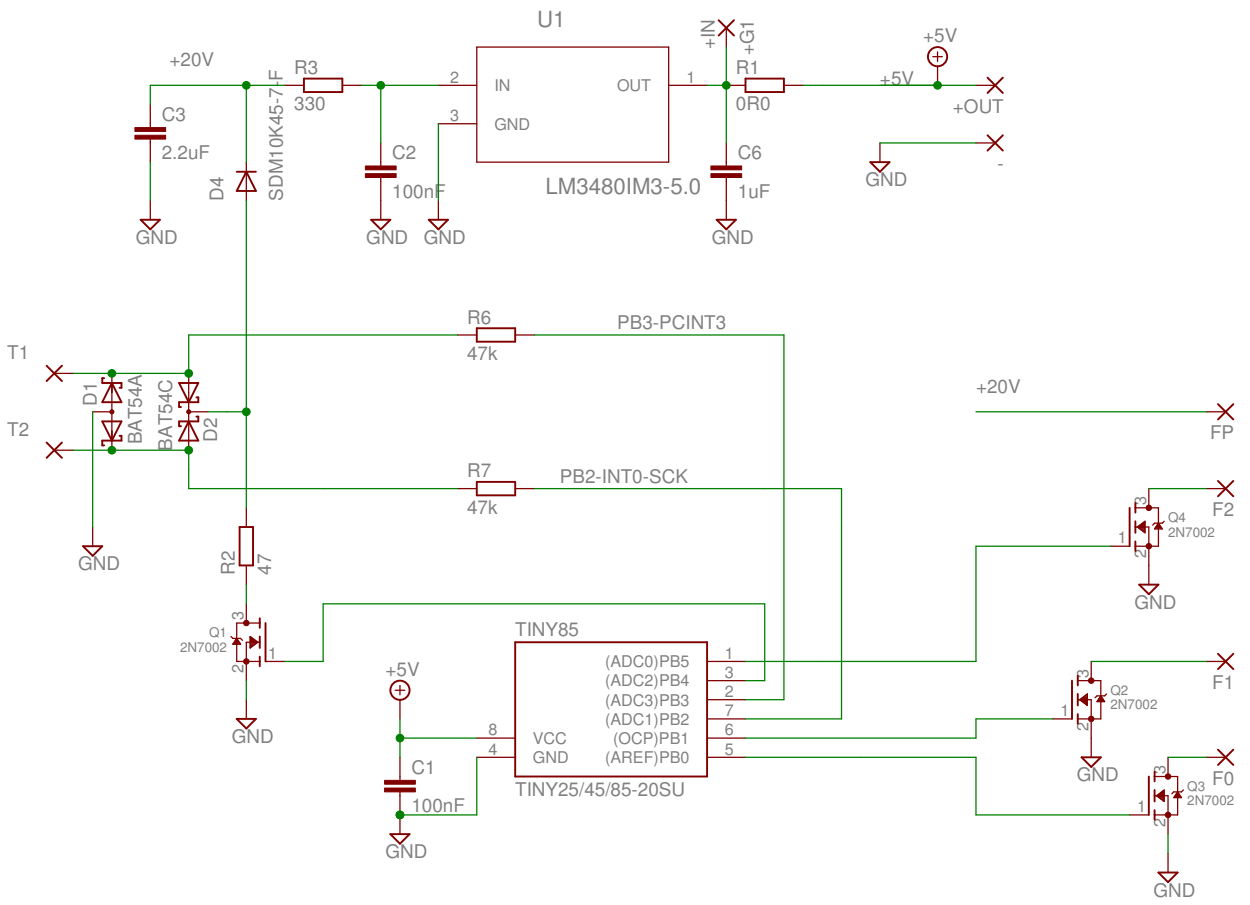

TITLE: sx-fund-dec85-rev3

Document Number:

REV:

Date: 07.05.14 17:46

Sheet: 1/1