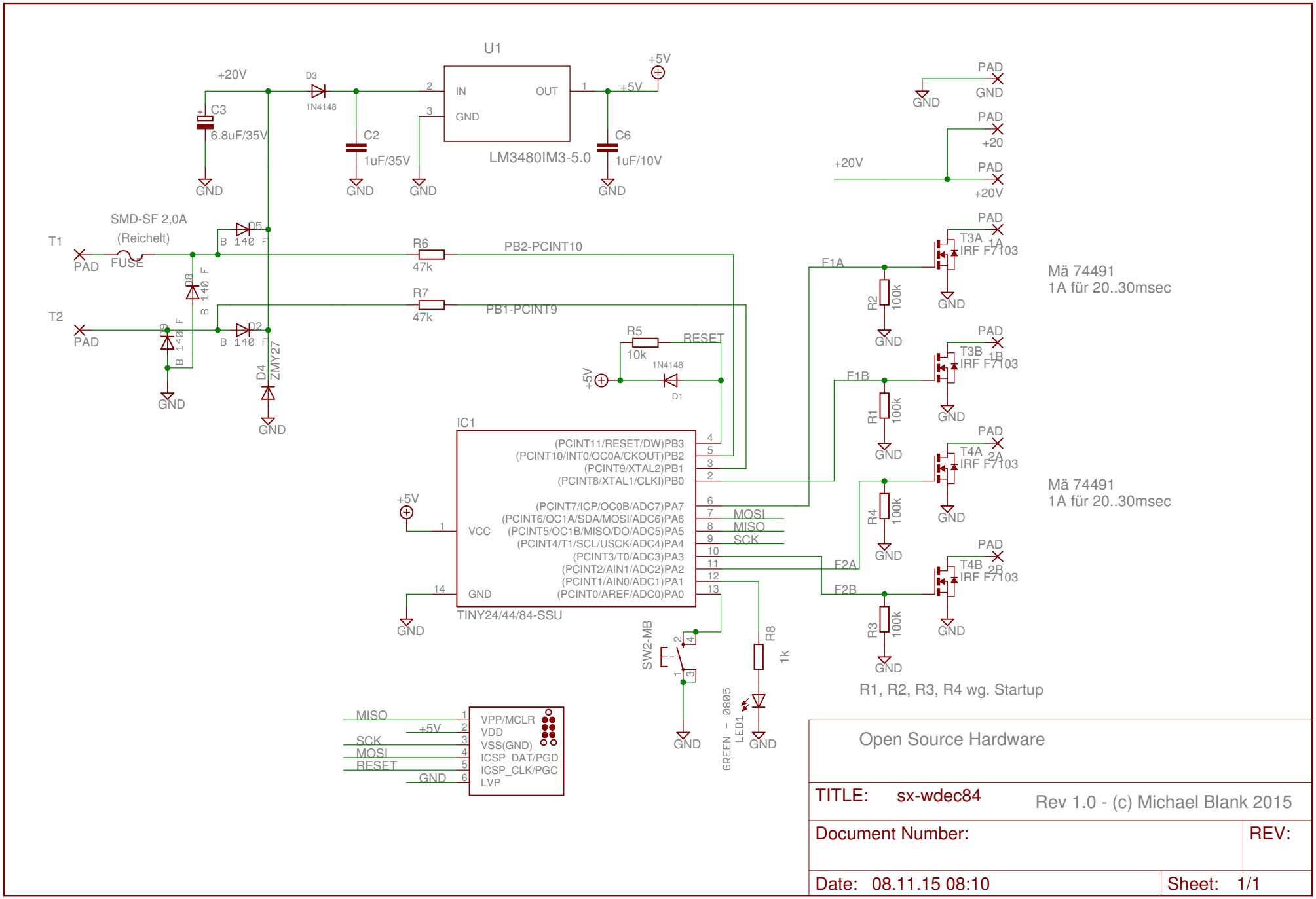

Open Source Hardware

TITLE: sx-wdec84

Rev 1.0 - (c) Michael Blank 2015

Document Number:

REV:

Date: 08.11.15 08:10

Sheet: 1/1